THE MODERATING ROLE OF PERCEIVED CSR MESSAGES ON THE RELATIONSHIP BETWEEN E-WOM AND ONLINE CUSTOMER TRUST

Nguyen Hong Quan*, Pham Lan Huong, Pham Thai Ha, Tran Hong Ha, Ha Minh Ngoc, Le Thi Hong Loan

Foreign Trade University

*Corresponding author: quannh@ftu.edu.vn

(Received: February 25, 2022; Accepted: May 13, 2022)

Abstract - Electronic word of mouth (e-WOM) studies have been popular as a result of the rise of social networks and e-commerce. Nonetheless, there has been very little research on CSR communication associated with e-WOM. The purpose of this study is to see how e-WOM, as a means of sharing information about CSR activities, affects Vietnamese B2C e-commerce customers' trust. With the help of 349 online consumers in Hanoi, data was gathered through online and direct survey methods. As a result of the findings, we can conclude that the relationship between e-WOM and customer's trust is moderated by CSR messages. The authors provide a variety of solutions based on the research findings to assist B2C organizations in improving their communicating information about CSR activities to achieve the optimum marketing effectiveness

Key words - Word of Mouth; CSR; CSR message; marketing; E-Commerce.

1. Introduction

Word-of-mouth (WOM) is widely recognized as an essential component influencing consumers' assessments and behavior toward a product in consumer behavior theories [1], [2]. With the growth of the Internet, another type of WOM implemented on digital sites (e-WOM) is increasingly being used and explored [3], [4]. e-WOM is even considered to be more effective than conventional methods due to its easy accessibility to the masses with huge amounts of information [5].

On the other hand, corporate social responsibility (CSR) has been asserting an essential role, becoming a tempting topic in research [6], [7], in businesses [8], [9] as well as in the public [10]. Previous studies have shown that CSR activities positively impact consumers' attitudes and behaviors [11], [12], creating a long-term relationship between retailers and customers [13]. However, the benefits that a brand can acquire are intensely determined by the level of customers' awareness of CSR activities [14].

In communicating CSR information, businesses often encounter doubts from consumers [15] about whether the purpose of their activities is social-oriented or barely to gain profit [16]. Prior research has shown that the perceived credibility is in inverse ratio with the extent of control a corporation has over CSR information. [8]. Since e-WOM is generated by a third party - the customer community - and permits real customers to interact and openly discuss, thereby lowering skepticism [13], it may be a faster and more effective communication method for CSR messages than other types of promotions carried out by enterprises.

There have been many prior theories studying the influence of CSR on consumer perception [17], [18], [19] as well as CSR promoting WOM in offline and online contexts [11], [20]. However, no research has yet delved into the impact of e-WOM, specifically in the field of CSR information, on online consumers. Since e-WOM and information on CSR activities jointly affect consumer trust, an urgent question arises: Whether the combination of e-WOM and CSR messages has a positive influence on consumers? Is there a moderating factor in the relationship of these three factors?

Therefore, the authors chose to conduct this research on the impact of e-WOM on consumer trust, with perceived CSR messages playing a moderating role.

2. Literature review

2.1. e-WOM

e-WOM is described as "any positive or negative statement by a potential consumer or former consumer about a product or company made available to countless people and organizations through the Internet" [21]. In another study, e-WOM is determined to be the direct verbal communication between the receiver and the sender concerning a product or service where the receiver is aware that the message sent from the sender is non-commercial [22]. Specifically, Litvin et al. [23] defined e-WOM as all informal consumer-directed communications with advanced technology, concerning the consumption or characteristics of particular goods, services, or sellers. Based on the gathering of concepts in previous studies and the scope of this study, e-WOM is interpreted as a form of communication using digital tools among consumers about products, services, advertisements, brands, or companies, and it considerably influences other consumers. In this research paper, the authors focus on the content of the e-WOM, which is information on CSR activities, also known as corporate social responsibility activities.

Thanks to the Internet, e-WOM information is spread on a large scale with a high speed [21] and in various forms such as text, images, or video [24]. In addition, a distinguishing feature of e-WOM from conventional word of mouth (WOM) is that e-WOM information is much easier to measure than WOM information in some aspects like forms of presentation, stability, and quantity [25], [26], [27].

Today, e-WOM has become one of the most effective tools in corporate strategy and has a massive impact on consumer trust and purchasing behavior. In this study, the authors focus on exploiting e-WOM as an information channel to help consumers interact with messages and information on CSR activities.

2.2. Customer trust

Trust is crucial in commercial transactions between customers and suppliers, particularly online [28]. Buyers and sellers can not communicate face-to-face in an online shopping environment, consumers have no direct interaction with the products or services they wish to purchase. As a result, there is a sense of uncertainty and ambiguity. Consumers must have faith in a company's products and services in order to make purchasing decisions.

Previous research groups have defined customer trust in a variety of ways including the readiness to rely on a partner they believe [29] and the belief that customers will not be excessively exploited from their dependence on individuals or organizations in the transaction process [30]. Psychologists view trust as a predictor of how customers will react to a transaction [31], whereas economists concentrate on how it decreases the level of anxiety as well as ambiguity in trading [31], [32], [33].

Based on the aforementioned theoretical basis, customer trust in this study will be analyzed from the following perspective: Consumer trust is the readiness to rely on an exchange partner in the purchasing transaction with the expectation of not being exploited unfairly.

2.3. Perceived CSR messages

CSR efforts have been found to have a positive impact on purchasing behavior and consumer trust in several prior studies [11], [34], [35], [36]. However, nowadays, businesses must increasingly focus on communicating and disseminating messages behind their CSR actions to consumers due to the advent of mass media. As a result, instead of looking at CSR messages in terms of organizational context, planning, and performance evaluation, this research investigates them from the standpoint of marketing and communication.

According to recent studies, the public is gradually increasing their desire for information on CSR initiatives [37], particularly through digital platforms [38], [39]. Many scholars have focused on CSR communication in recent years, and there are several ways to define and characterize it: Implicit and explicit CSR communication [40], internal (directed toward internal stakeholders) and external (directed toward external stakeholders) [41]. The authors of this study concentrate on external CSR communication with key stakeholders - the consumers This study does not focus on the process of exchanging CSR messages, but rather on the impact of such messages on consumers, particularly in terms of how consumers perceive such messages when they receive them.

Consumer behavior intentions and opinions of a company are influenced by perceived CSR initiatives [11], [34], [35], [36]. Some scholars have established dimensions for creating effective CSR messages in order to measure consumers' perceptions while obtaining CSR messages. The authors synthesize five primary criteria: message fit [8], [42], message source [43], [44], message credibility [60], perceived commitment [15], and perceived motives [45].

2.4. Hypotheses and research model

2.4.1. e-WOM and customer trust

Previous research has shown that word of mouth is strongly and positively associated with consumer trustworthiness [46]. In the article of Vodicka and Devin [47], the author mentioned one element of trust, which is communication. In other words, communication is one of the factors that help develop customer trust. Kollat and Farache [48] also suggested that organizations or businesses can gain customer trust through the customers' journeys on social media. Being allowed to connect on social media helps develop a sense of connection between consumers and the brand, improving their positive attitudes [49]. Customer trust can be built up via electronic forums by e-WOM created by former consumers [50]. Thus, most potential consumers often decide whether they should trust the business or that company in electronic transactions based on e-WOM.

To test the theory about customer trust and the impact of e-WOM on customer trust, the authors propose the following hypothesis:

H1: e-WOM has a positive effect on customer trust

2.4.2. Perceived CSR messages and customer trust

The perception of information and messages concerning CSR efforts is consistent with the Hierarchical-of-Effect [51], [52]. As a result, when they receive information about a company's CSR activities, they will be aware of them, thereby triggering emotions and favorably affecting brand trust [51]. When purchasing products and services from companies practicing CSR, consumers are increasingly showing confidence and goodwill [53]. Kollat and Farache [48] also proposed that firms can earn consumer trust by sharing CSR information with clients on social media.

H2: Perceived CSR messages positively affects customer trust

2.4.3. The moderating role of perceived CSR messages

Consumers usually gain information about a firm's CSR activities from traditional sources such as TV, CSR annual reports, the firm website, the spokesperson who represented the company, etc. However, these sources of information raise cynicism about transparency [8], [54]. They are influenced or even controlled by the firm, which will cause a decrease in consumer trust since the more control a firm has, the less reliable information it is perceived [8], [13]. Therefore, e-WOM is considered an effective and reliable channel to transmit CSR messages since it comes from a third party and is generated based on the consumer's experience [13].

Numerous prior studies have demonstrated that e-WOM improves consumer trust [46], [55], [56]. While e-WOM brings a sense of credibility since it comes from a more intuitive third party or prior user experience [26], the e-WOM content is now another vital criterion for consumers to consider, which is CSR messages in the context of this study. As can be seen, improving customer trust requires e-WOM and the resonance of perceived CSR messages. However, the authors argue that perceived CSR

messages play the moderating role that influences the relationship between e-WOM and consumer trust. Kim and Lee [43] showed that information openness, transparency of message source, and message credibility, moderate the relationship between CSR messages and consumer trust. On the other hand, cynicism has been demonstrated in one study to reduce consumers' supporting behavior, such as trust in the company [57], [58]. Relatively, it can be understood that if consumers view enterprises' motivation and dedication to CSR activities as positive, their supportive behavior would increase. Chen et al. [59] discovered that the enterprise's competence has a moderating effect on the consumer's perception of the company's CSR.

As can be seen, the dimensions of perceived CSR messages are proven to moderate the relationship between e-WOM and consumer trust. As a result of the foregoing considerations, the authors arrived at the following hypothesis:

H3: Perceived CSR messages moderates the relationship between e-WOM and customer trust.

The authors propose a study model in Figure 1 based on the hypotheses stated above:

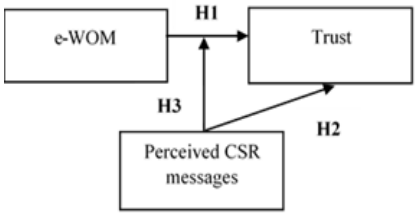

Figure 1. *Proposed research model*

Table 1. *Cronach's alpha and Exploratory factor analysis (EFA) analysis*

Construct	Item	Variable-total correlation	Cronbach's Alpha if item deleted	Cronbach's Alpha	EFA (Factor Loading)
e-WOM Goyette et al [1], Jalilvand et al [2]	EW1: Other people frequently inform me that enterprises are based on community and societal benefits.	0.690	0.820	0.855	0.785
	EW2: Other people frequently suggest that I buy products from companies that engage in socially responsible practices.	0.691	0.820		0.762
	EW3: I regularly receive good words about companies conducting corporate social responsibility activities from others.	0.694	0.820		0.770
	EW4: I regularly read various consumer reviews about a business's CSR activities to see what they think of the business.	0.625	0.837		0.646
	EW5: I frequently collect information about the corporate social responsibility activities to understand the business better.	0.656	0.830		0.714
CSR message Andrea Pérez [44], Lock et al [60], Lee et al [15], Wang and Huang [61]	CR1: I find that the corporate social responsibility practices align with their product and core values.	0.610	0.869	0.879	0.682
	CR2: I find source of information on a company's corporate social responsibility activities reliable	0.676	0.861		0.682
	CR3: I find information about corporate social responsibility from consumers more reliable than other information sources.	0.567	0.875		0.633
	CR4: I found that the information about corporate social responsibility activities is verified.	0.679	0.860		0.714
	CR5: I see a business capable of carrying out its responsibilities to the community.	0.683	0.861		0.797
	CR6: I find the business's commitment to the community credible.	0.749	0.851		0.770
	CR7: I think that the business really cares about the development of the community.	0.692	0.858		0.721
Customer trust Sukrat et al [62], Hong et al [63], Gefen, D. [30]	TR1: I think it's safe to shop at a socially responsible business.	0.636	0.805	0.835	0.685
	TR2: I think this business always keeps its promise and commitment to its users.	0.693	0.779		0.778
	TR3:I think these businesses are trustworthy.	0.694	0.779		0.815
	TR4: I believe in the business which has carried out social responsibility activities.	0.639	0.803		0.712

Source: The authors compiled from SPSS

3. Methodology

Both qualitative and quantitative methodologies were used to perform the research. The qualitative method uses document collection techniques and desk research to discover the relationship between three factors, allowing hypotheses and an overall model to be constructed. e-WOM, perceived CSR messages and their impact on their trust are measured using a quantitative method. On both online and offline platforms in Vietnam, primary data was acquired by questionnaire from 357 social network users. The survey uses a 5-level Likert scale to incorporate three factors and 16 observable variables.

Analytical methodologies: Data is entered into SPSS software after coding to measure and analyze data using Cronbach's Alpha coefficient, exploratory factor analysis EFA, and other approaches. Regression analysis was used to see how e-WOM and perceived CSR messages affect consumer trust and how perceived CSR messages moderates the relationship between e-WOM and consumer trust.

4. Data analysis and results

4.1. Sample proofing

The authors conducted an online survey of online shoppers in Hanoi, Vietnam's capital. There were 349 valid votes cast, resulting in a response rate of 97.7%. The number of female genders and male gender are respectively 56.5% and 43.5%. Other figures include: Age: Less than 18 years old (4%); 18 to 25 years old (82.7%); 26 to 30 years old (10%); 31 to 35 years old (1.3%); 36 to 40 years old (1.2%); 40 years and older (0.8%). Education: Lower secondary education level (1.4%); high school (9.2%); intermediate, college (9%); university (78.3%); graduate (2.1%). Income: below 5 million VND (79.5%); from 5 million to 10 million VND (11.7%); from 10 million to 20 million VND (4.3%); from 20 million to 40 million VND (2.5%); over 40 million VND (2%). Time using social networks: < 2 hours/day (13.7%); 2-5 hours/day (60.8%); >5 hours/day (25.5%).

4.2. Cronbach's alpha, EFA and regression analysis

The authors interviewed 10 professionals in the fields of business and marketing to score and evaluate the items based on the theory and the creation of a new scale (CR1 and CR3). After the new scales were approved, the authors conducted a survey with a random sample of 34 people to assess their quantitative capacity before officially incorporating them in the last questionnaire.

Cronbach's Alpha coefficient of the factors is in the range of 0.835 to 0.879 and all observations have variable correlation - the sum is greater than 0.5, thus ensuring the accuracy of the research model. EFA was conducted with 15 observed variables belonging to 3 factors. For all variables, the coefficients satisfy the conditions of EFA: Load factor > 0.5; 0.5 ≤ KMO = 0.888 ≤ 1; Chi-Square = 3220,935; Sig. = 0.000 < 0.05; Eigenvalues = 1.631 > 1; total variance extracted =54.186% > 50%. Thus, after analyzing EFA, the study has 3 factors that are suitable for the model, including: e-WOM, Information on CSR activities, and customer trust.

4.3. CFA of the model without moderator

In the next step, the authors conduct confirmatory factor analysis (CFA) to establish a suitable measurement model to test the SEM model.

The results show that the values of the Chi-squared index/df = 2.308 (<3), the comparative fit index (CFI) = 0.958 (> 0.95), the goodness of fit index (GFI) = 0.940 (> 0.9), root mean square error of approximation (RMSEA) = 0.055 (< 0.06), so it can be concluded that the model is suitable and good, according to Hu & Bentler [64] and Hair et al. [65].

Table 2. *Correlations Coefficients*

Relationship between variables	*Estimate*	*Standard Error (S.E.)*	*Critical Ratio (C.R.)*	*P-value*
CR<-->TR	*0.152*	*0.027*	*5.582*	***
CR<-->EW	*0.162*	*0.022*	*7.224*	***
TR<-->EW	*0.237*	*0.033*	*7.245*	***

Source: The authors compiled from AMOS

Table 2 shows that the weights of the observed variables meet the allowable standard (≥0.5) and are statistically significant (p-values are all equal to 0.000). Thus, it can be concluded that all observed variables have convergent values. The correlation coefficient between any two concepts in the model is less than 1. Thus, the authors can confirm that the model is convergent and discriminant. To prove it more clearly, the authors perform some more tests.

Table 3. *Convergent and discriminant validity*

Variable	*Composite Reliability (CR)*	*Average Variance Extracted (AVE)*	*Maximum Shared Variance (MSV)*
CR	*0.881*	*0.516*	*0.231*
EW	*0.857*	*0.547*	*0.231*
TR	*0.836*	*0.561*	*0.231*

Source: The authors compiled from AMOS

In terms of convergence, all factors have the extracted mean variance (AVE) greater than 0.5. In terms of discriminant, all the factors have the extracted mean variance (AVE) greater than the maximum specific variance (MSV). All of them meet the test criteria of Hair et al. [63], so the model ensures reliability, convergence and discriminant.

4.4. SEM of the model without moderation

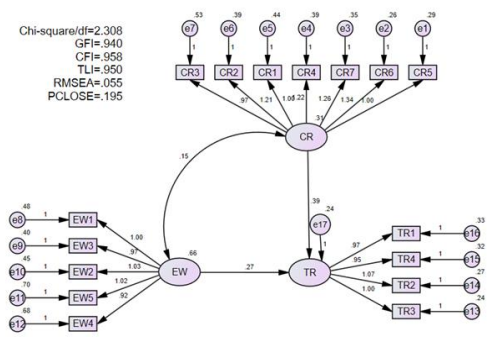

Figure 2. *SEM analysis*

According to the results presented in Figure 2, the value of the Chi-squared index/df = 2,308 (< 3); Comparative fitness index (CFI) = 0.958 (> 0.95); Conformity Index (GFI) = 0.940 (> 0.9); Original mean square error (RMSEA) = 0.055 (< 0.06), both satisfy the condition. Thus, it can be concluded that the model fits the research data.

Table 4. *Standardized Regression Weights*

Relationship between variables	*Estimate*	*Standard Error (S.E.)*	*Critical Ratio (C.R.)*	*P-value*
TR<---CR	0.270	0.042	6.412	***
TR<---EW	0.394	0.061	6.430	***

Source: The authors compiled from AMOS

The results show that, of the two variables affecting Consumer Confidence (TR), information about CSR (CR) has a lower standard regression coefficient (0.207), e-WOM (EW) has a lower regression coefficient (0.207). higher normalization (0.394).

4.5. The moderating role

In the author's research model, CR plays the role of both a moderator and an independent variable. In the previous steps, the author's team performed CFA analysis in the presence of CR variable, so in this step, the model when adding a moderator variable has ensured the appropriateness. The authors performed the analysis of regulatory variables by SMART-PLS software and used Bootstrapping technique with 1000 repeated samples to evaluate the regulatory relationship.

Table 5. *Coefficients*

Relationship between variables	**Original (O)**	**Mean (M)**	**STDEV**	**T Statistics**	**P values**
CR—> TR	0.322	0.328	0.047	6.795	0.000
EW—>TR	0.304	0.305	0.043	7.071	0.000
INT—>TR	0.126	0.124	0.044	2.849	0.004

Source: The authors compiled from SMARTPLS

The results show that the test P-value of the relationship of information about CSR (CR) on Consumer Confidence (TR) is 0.000 < 0.05, showing that information about CSR has an impact on Consumer Confidence. consumption. Regression coefficient Original Sample (O) = 0.322 > 0 shows that CSR information has a positive impact on consumer confidence, that is, the more consumers receive CSR information of the business, the greater the consumer's trust. higher consumption for that business. Similarly, the test P-value of the relationship e-WOM (EW) on Consumer Confidence (TR) is 0.000 < 0.05, showing that e-WOM has an impact on Consumer Confidence. Regression coefficient Original Sample (O) = 0.304 > 0 shows that e-WOM has a positive impact on Consumer Confidence, when consumers receive more word of mouth messages about CSR of enterprises, trust will be higher. of consumers to businesses is higher.

The test p-value of the relationship INT affects Consumer Confidence is 0.004 < 0.05, showing that INT (or product EW*CR) has an impact on Consumer Confidence. Thus, information about CSR plays a role in regulating the relationship from e-WOM to Consumer Confidence. Original Sample Regression (O) = 0.126 > 0 shows that more CSR information will increase the impact of e-WOM on Consumer Confidence.

To evaluate the explanatory level of the independent variable for the dependent variable, the authors use the results of the Algorithm analysis. The adjusted R-squared value of TR is 0.275, so the independent variables explained 27.5% of the variation (variance) of the variable TR, specifically here the independent variables CR and EW.

5. Conclusion and managerial complications

5.1. Conclusion

The process of surveying the impact of e-WOM on online customer trust with the moderating role of perceived CSR messages took place in the form of face-to-face and online questionnaires, the results of which 349 valid samples were collected. Through analysis according to Cronbach's Alpha coefficient, a total of 15 scales in the model met the reliability requirements with coefficients of 0.7 or higher. EFA analysis results show that 15 observed variables are classified into 3 factors, all observed variables have loading factor greater than 0.5 and no longer have bad variables. Besides, by analyzing Confirmatory Factor Analysis (CFA), this study confirms that the overall Model Fit, the quality of the observed variables, and the reliability and convergence analysis indicators are all guaranteed. The proposed hypotheses are proven in which CSR has a lower impact on consumer trust than e-WOM. CSR has a positive moderating effect on the relationship between e-WOM and consumer trust.

E-WOM has the biggest impact on consumer trust in businesses. This means that the higher the level of access to e-WOM messages, the higher the consumer's trust in the corporate. This result is intended to reinforce the conclusion of [44], [50].

From the marketing and media perspective, CSR is proved to have a positive impact on customer trust. The more CSR messages are conveyed to consumers, the more aware they will be of CSR and more trust they will place on the brand. This result is similar to previous studies such as Kollat and Farache [48]; Hazel and Kang [51], Park et al [53].

In fact, Fatmawati and Fauzan [12] have demonstrated the moderating relationship of CSR on e-WOM and consumer trust, but have only studied the types of CSR that have the mentioned effect but not the role of information about CSR activities in general. This study added a new point which proves that perceived CSR messages have a moderating role to the relationship between e-WOM and consumer trust. Previous studies such as Park et al. [26], Bergeron et al. [46], Bulut and Karabulut [55], Rahman et al. [56] only showed the single impact of e-WOM on consumer trust, but in today's context, consumers are increasingly paying attention to the content of e-WOM and sensitive to the motives behind [8], [66], therefore, the authors expect that there is a need of a moderator between this relationship. In contrast, according to Chu and Chen [13], CSR messages also need to be delivered through word of mouth to enhance credibility and reduce skepticism

5.2. Managerial complications

In order to improve the effectiveness of e-WOM activities about CSR activities to better consumer trust, businesses had better focus on the factors that play the most important role as well as improve low-impact factors in the model. As follows:

First, retailers need to put emphasis on the accuracy and reliability of CSR messages which consumers can use to spread e-WOM and communicate with others. Enterprises need to be careful and honest in communicating information about CSR activities, thereby making the public and consumers when receiving the information to feel the sincerity of the business in the motives. and commit to CSR activities. In addition, choosing to communicate information about CSR activities in accordance with brand's values and images would bring credibility and logic in consumers' perceptions of the business.

Second, corporations should develop, supplement and perfect the e-WOM system and platform so that consumers could have more opportunities and effective ways to transmit information about CSR activities to their surrounding community. e-WOM in various forms (leaving comments, writing social media posts, creating videos, ...) will improve the quality of interactions between consumers.

Finally, because e-WOM is an uncontrollable element to retailers, it is necessary for them to understand clearly the factors that encourage or prevent online consumers to spread positive e-WOM, which can be related to social behavior, the quality of the online platform, etc. By grasping these factors, businesses can encourage and motivate consumers to engage in more word of mouth, thereby bringing more optimal communication-related results

REFERENCES

[1] Goyette, Isabelle, et al. "e-WOM Scale: word-of-mouth measurement scale for e-services context". *Canadian Journal of Administrative Sciences/Revue Canadienne des Sciences de l'Administration* 27.1 (2010): 5-23.

[2] Jalilvand, Mohammad Reza, and Neda Samiei. *"The impact of electronic word of mouth on a tourism destination choice: Testing the theory of planned behavior (TPB)".* Internet research (2012). DOI:10.1108/10662241211271563

[3] Sen, Shahana, and Dawn Lerman. "Why are you telling me this? An examination into negative consumer reviews on the web". *Journal of interactive marketing* 21.4 (2007): 76-94.

[4] Chu, Shu-Chuan, and Yoojung Kim. "Determinants of consumer engagement in electronic word-of-mouth (e-WOM) in social networking sites". *International journal of Advertising* 30.1 (2011): 47-75.

[5] Chatterjee, Patrali. "Online reviews: do consumers use them?" *Association for Consumer Research*, M. C. Gilly, J. Myers-Levy, eds. (2001): 129-134.

[6] Romani, Simona, Silvia Grappi, and Richard P. Bagozzi. "Explaining consumer reactions to corporate social responsibility: The role of gratitude and altruistic values". *Journal of business ethics* 114.2 (2013): 193-206.

[7] Wei, Gao, et al. "The Relationship of Sustainability Communication on Social Media with Banking Consumers' Loyalty through e-WOM". *Sustainability* 13.7 (2021): 3832.

[8] Du, Shuili, Chitrabhan B. Bhattacharya, and Sankar Sen. "Maximizing business returns to corporate social responsibility (CSR): The role of CSR communication". *International journal of management reviews* 12.1 (2010): 8-19.

[9] Udomkit, Nuntana. "CSR analysis: A reflection from businesses and the public in Thailand". J. Mgmt. & Sustainability 3 (2013): 155.

[10] Han, Heesup, et al. "Impact of environmental CSR, service quality, emotional attachment, and price perception on word-of-mouth for full-service airlines". *Sustainability* 12.10 (2020): 3974.

[11] Tong, Canon, and Anthony Wong. "The influences of corporate social responsibility to customer repurchases intentions, customer word-of-mouth intentions and customer perceived food quality of fast-food restaurants in Hong Kong and the mediating effects of corporate reputation". *British Journal of Economics, Management & Trade* 4.11 (2014): 1655-1678.

[12] Fatmawati, Indah, and Nizar Fauzan. "Building customer trust through corporate social responsibility: The Effects of corporate reputation and word of mouth". *The Journal of Asian Finance, Economics and Business* 8.3 (2021): 793-805.

[13] Chu, Shu-Chuan, and Hsuan-Ting Chen. "Impact of consumers' corporate social responsibility-related activities in social media on brand attitude, electronic word-of-mouth intention, and purchase intention: A study of Chinese consumer behavior". *Journal of Consumer Behaviour* 18.6 (2019): 453-462.

[14] Sen, Sankar, Chitra Bhanu Bhattacharya, and Daniel Korschun. "The role of corporate social responsibility in strengthening multiple stakeholder relationships: A field experiment". *Journal of the Academy of Marketing science* 34.2 (2006): 158-166.

[15] Lee, Sun Young, Weiwu Zhang, and Alan Abitbol. "What makes CSR communication lead to CSR participation? Testing the mediating effects of CSR associations, CSR credibility, and organization–public relationships". *Journal of business ethics* 157.2 (2019): 413-429.

[16] Foreh, Mark R., and Sonya Grier. "When is honesty the best policy? The effect of stated company intent on consumer skepticism". *Journal of consumer psychology* 13.3 (2003): 349-356.

[17] Choi, Beomjoon, and Suna La. "The impact of corporate social responsibility (CSR) and customer trust on the restoration of loyalty after service failure and recovery". *Journal of Services Marketing* 273 (2013): 223-233.

[18] Martínez, Patricia, and Ignacio Rodríguez Del Bosque. "CSR and customer loyalty: The roles of trust, customer identification with the company and satisfaction". *International Journal of Hospitality Management* 35 (2013): 89-99.

[19] Cheng, Guping, et al. "The relationship between csr communication on social media, purchase intention, and e-wom in the banking sector of an emerging economy". *Journal of Theoretical and Applied Electronic Commerce Research* 16.4 (2021): 1025-1041.

[20] Saleh, Mona HT, Ahmed Y. Ebeid, and Talaat A. Abdelhameed. "Customers' perception of corporate social responsibility (CSR): its impact on word-of-mouth and retention". *Innovative Marketing* 11.2 (2015): 49-55.

[21] Hennig-Thurau, Thorsten, Gianfranco Walsh, and Gianfranco Walsh. "Electronic word-of-mouth: Motives for and consequences of reading customer articulations on the Internet". *International journal of electronic commerce* 8.2 (2003): 51-74.

[22] Arndt, J. "Product-related conversations in diffusion of new products". *Journal of Marketing Research* 9.5 (1967): 261 – 265.

[23] Litvin, Stephen W., Ronald E. Goldsmith, and Bing Pan. "Electronic word-of-mouth in hospitality and tourism management". *Tourism management* 29.3 (2008): 458-468.

[24] Cheung, Christy MK, and Dimple R. Thadani. "The impact of electronic word-of-mouth communication: A literature analysis and integrative model". *Decision support systems* 54.1 (2012): 461-470.

[25] Park, Do-Hyung, and Sara Kim. "The effects of consumer knowledge on message processing of electronic word-of-mouth via online consumer reviews". *Electronic commerce research and applications* 7.4 (2008): 399-410.

[26] Park, Do-Hyung, Jumin Lee, and Ingoo Han. "The effect of on-line consumer reviews on consumer purchasing intention: The moderating role of involvement". *International journal of electronic commerce* 11.4 (2007): 125-148.

[27] Cheung, Christy MK, and Dimple R. Thadani. "The impact of electronic word-of-mouth communication: A literature analysis and integrative model". *Decision support systems* 54.1 (2012): 461-470.

[28] Shin, Jae Ik, et al. "The effect of site quality on repurchase intention in Internet shopping through mediating variables: The case of university students in South Korea". *International Journal of Information Management* 33.3 (2013): 453-463.

[29] Vosta, Leila Nasrolahi, and Mohammad Reza Jalilvand. "Examining the influence of social capital on rural women entrepreneurship: An empirical study in Iran". *World Journal of Entrepreneurship, Management and Sustainable Development* 10.3 (2014): 209-227.

[30] Gefen, David, Elena Karahanna, and Detmar W. Straub. "Inexperience and experience with online stores: The importance of TAM and trust". *IEEE Transactions on engineering management* 50.3 (2003): 307-321.

[31] Lewicki, Roy J., and Barbara Benedict Bunker. *Trust in relationships: A model of development and decline*. Jossey-Bass/Wiley, 1995.

[32] Granovetter, Mark. "Economic action and social structure: The problem of embeddedness". *The sociology of economic life*. Routledge, 2018. 22-45.

[33] Zucker, Lynne G. "Production of trust: Institutional sources of economic structure, 1840–1920". *Research in organizational behavior* 8 (1986): 53–111.

[34] Mohammed, Abdulalem, and Abdullah Al-Swidi. "The influence of CSR on perceived value, social media and loyalty in the hotel industry". *Spanish Journal of Marketing-ESIC* 23.3 (2019): 373-396.

[35] Raza, Ali, et al. "Linking corporate social responsibility to customer loyalty through co-creation and customer company identification: Exploring sequential mediation mechanism". *Sustainability* 12.6 (2020): 2525.

[36] Oppewal, Harmen, Andrew Alexander, and Pauline Sullivan. "Consumer perceptions of corporate social responsibility in town shopping centres and their influence on shopping evaluations". *Journal of retailing and Consumer services* 13.4 (2006): 261-274.

[37] Ettinger, Andrea, Sonja Grabner-Kräuter, and Ralf Terlutter. "Online CSR communication in the hotel industry: Evidence from small hotels". *International Journal of Hospitality Management* 68 (2018): 94-104.

[38] Verk, Nataša, Urša Golob, and Klement Podnar. "A dynamic review of the emergence of corporate social responsibility communication". *Journal of Business Ethics* 168.3 (2021): 491-515.

[39] Bialkova, Svetlana, and Stephanie Te Paske. "Campaign participation, spreading electronic word of mouth, purchase: how to optimize corporate social responsibility, CSR, effectiveness via social media?" *European Journal of Management and Business Economics* (2020).

[40] Morsing, Mette, and Laura J. Spence. "Corporate social responsibility (CSR) communication and small and medium sized enterprises: The governmentality dilemma of explicit and implicit CSR communication". *Human relations* 72.12 (2019): 1920-1947.

[41] Glavas, Ante, and Lindsey N. Godwin. "Is the perception of 'goodness' good enough? Exploring the relationship between perceived corporate social responsibility and employee organizational identification". *Journal of business ethics* 114.1 (2013): 15-27.

[42] Becker-Olsen, Karen L., B. Andrew Cudmore, and Ronald Paul Hill. "The impact of perceived corporate social responsibility on consumer behavior". *Journal of business research* 59.1 (2006): 46-53.

[43] Kim, Hyosun, and Tae Ho Lee. "Strategic CSR communication: A moderating role of transparency in trust building". *International Journal of Strategic Communication* 12.2 (2018): 107-124.

[44] Pérez, Andrea. "Building a theoretical framework of message authenticity in CSR communication". *Corporate Communications: An International Journal* 24.2 (2019), 334-350.

[45] Yoo, Dongho, and Jieun Lee. "The effects of corporate social responsibility (CSR) fit and CSR consistency on company evaluation: The role of CSR support". *Sustainability* 10.8 (2018): 2956.

[46] Bergeron, Jasmin, Line Ricard, and Jean Perrien. "Les déterminants de la fidélité des clients commerciaux dans l'industrie bancaire canadienne". *Canadian Journal of Administrative Sciences/Revue Canadienne des Sciences de l'Administration* 20.2 (2003): 107-120.

[47] Vodicka, Devin. "The Four Elements of Trust". *Principal Leadership* 7.3 (2006): 27-30.

[48] Kollat, Jana, and Francisca Farache. "Achieving consumer trust on Twitter via CSR communication". *Journal of consumer marketing* 34.6 (2017): 505–514.

[49] Oh, Jeyoung, and Eyun-Jung Ki. "Factors affecting social presence and word-of-mouth in corporate social responsibility communication: Tone of voice, message framing, and online medium type". *Public Relations Review* 45.2 (2019): 319-331.

[50] Dellarocas, Chrysanthos. "The digitization of word of mouth: Promise and challenges of online feedback mechanisms". *Management science* 49.10 (2003): 1407-1424.

[51] Hazel, Desiree, and Jiyun Kang. "The contributions of perceived CSR information substantiality toward consumers' cognitive, affective, and conative responses: The hierarchy of effects model approach". *Clothing and textiles research journal 36.2* (2018): 62-77.

[52] Lavidge, Robert J., and Gary A. Steiner. "A model for predictive measurements of advertising effectiveness". *Journal of marketing* 25.6 (1961): 59-62.

[53] Park, Jongchul, Hanjoon Lee, and Chankon Kim. "Corporate social responsibilities, consumer trust and corporate reputation: South Korean consumers' perspectives". *Journal of business research* 67.3 (2014): 295-302.

[54] Lee, Sun Young, Weiwu Zhang, and Alan Abitbol. "What makes CSR communication lead to CSR participation? Testing the mediating effects of CSR associations, CSR credibility, and organization–public relationships". *Journal of business ethics* 157.2 (2019): 413-429.

[55] Bulut, Zeki Atıl, and Ali Naci Karabulut. "Examining the role of two aspects of e-WOM in online repurchase intention: An integrated trust–loyalty perspective". *Journal of Consumer Behaviour* 17.4 (2018): 407-417.

[56] Rahman, Md Adnan, et al. "Brand image, e-WOM, trust and online purchase intention of digital products among Malaysian consumers". *Journal of Xi'an University of Architecture & Technology 12* (2020): 4935-4946.

[57] Rim, Hyejoon, and Sora Kim. "Dimensions of corporate social responsibility (CSR) skepticism and their impacts on public evaluations toward CSR". *Journal of Public Relations Research* 28.5-6 (2016): 248-267.

[58] Elving, Wim JL. "CSR and skepticism: The influence of fit and reputation on skepticism towards CSR communication". *Proceedings of the conference on corporate communication*. New York: Corporate Communication International at Baruch College/CUNY, 2010.

[59] Rim, Hyejoon, and Sora Kim. "Dimensions of corporate social responsibility (CSR) skepticism and their impacts on public evaluations toward CSR". *Journal of Public Relations Research* 28.5-6 (2016): 248-267).

[60] Lock, Irina, and Peter Seele. "Measuring credibility perceptions in CSR communication: a scale development to test readers' perceived credibility of CSR reports". *Management Communication Quarterly* 31.4 (2017): 584-613.

[61] Wang, Ruoxu, and Yan Huang. "Communicating corporate social responsibility (CSR) on social media: How do message source and types of CSR messages influence stakeholders' perceptions?." *Corporate communications: An international journal*, 2018. Vol. 23 No. 3, pp. 326-341. https://doi.org/10.1108/CCIJ-07-2017-0067

[62] Sukrat, Supattana, Borworn Papasratorn, and Vithida Chongsuphajaisiddhi. "Impact of customer trust on purchase intention in organic rice through Facebook: A pilot study". *The 10th International Conference on e-Business (iNCEB2015)*. 2015.

[63] Hong, Ilyoo B., and Hoon S. Cha. "The mediating role of consumer trust in an online merchant in predicting purchase intention". *International Journal of Information Management* 33.6 (2013): 927-939.

[64] Hu, Li-tze, and Peter M. Bentler. "Cutoff criteria for fit indexes in covariance structure analysis: Conventional criteria versus new alternatives". *Structural equation modeling: a multidisciplinary journal* 6.1 (1999): 1-55.

[65] Hair, Joseph F., et al. "When to use and how to report the results of PLS-SEM". *European business review* 31.1 (2019): 2-24.

[66] Kim, Sora, and Mary T. Ferguson. "Public expectations of CSR communication: What and how to communicate CSR". *Public Relations Journal* 8.3 (2014): 1-22.